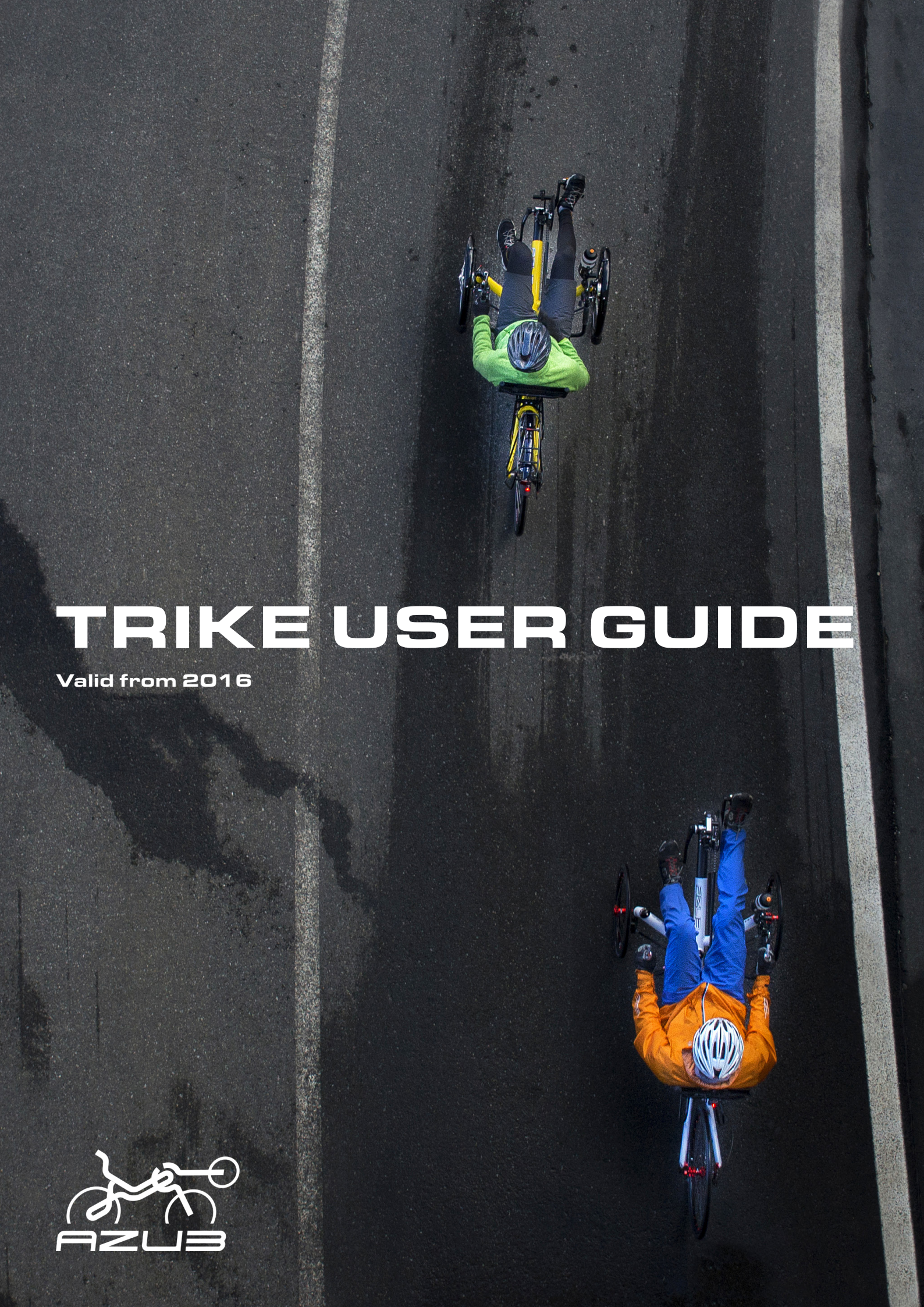

TRIKE USER GUIDE

Valid from 2016

AZUB

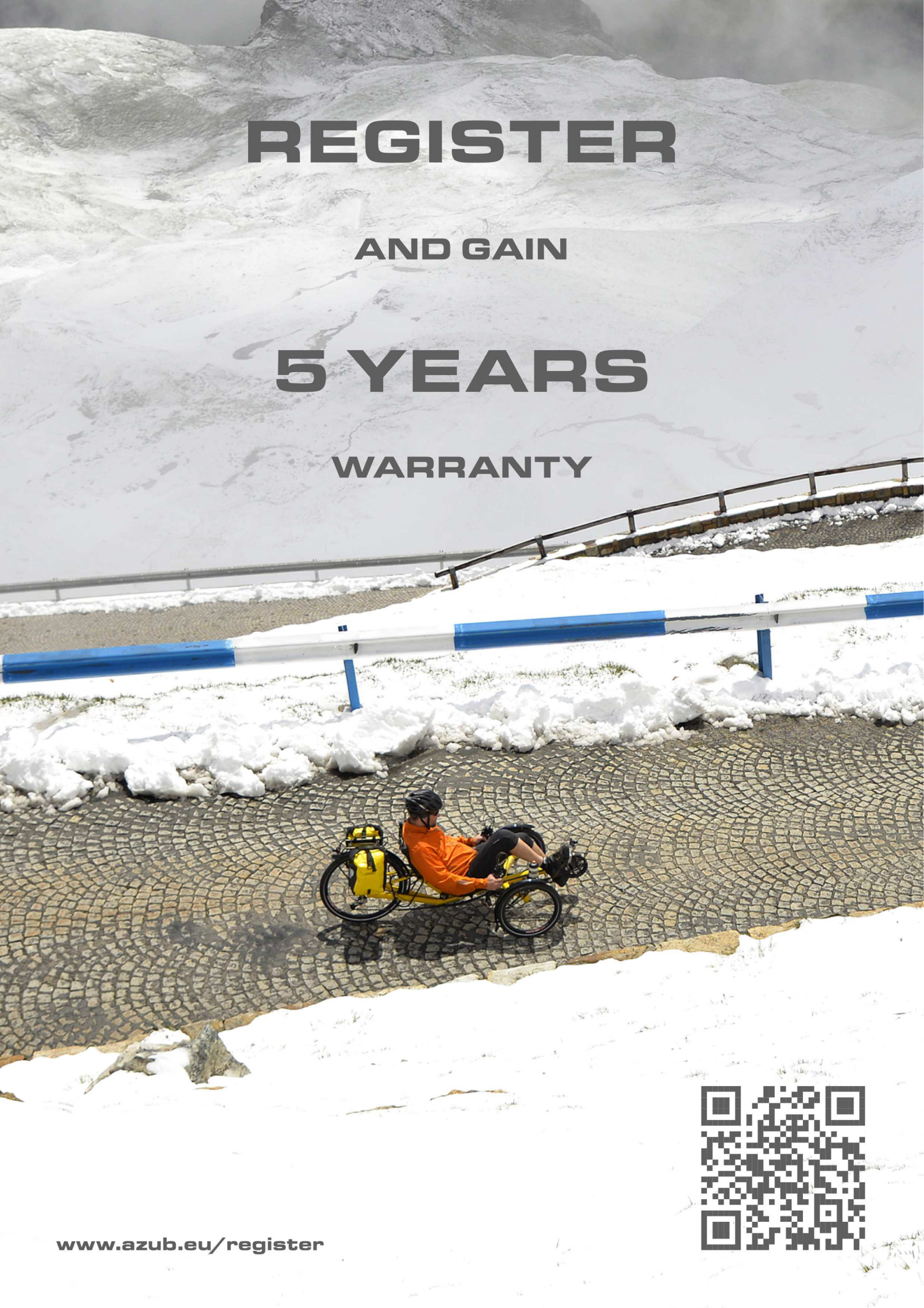
REGISTER
AND GAIN
5 YEARS
WARRANTY
www.azub.eu/register

Contents

Let's begin

1. Introduction

Dear AZUB trike rider,

We would like to thank you for choosing our brand from a wide selection on the market. Since the beginning of our trikes' development, we have aimed for your satisfaction. We hope that our product meets your expectations and brings you many pleasant experiences. We recommend that you read the entire user guide, which describes the features of your trike and instructs you in the trike's full and safe use and acquaints you or your local bike shop with the necessary maintenance procedures to ensure proper function of the trike for the longest period possible. This user guide also explains our warranty program. This should only take about 30 minutes, and it will surely be a useful education in using your trike safely and effectively.

We believe that if you are comfortable with the maintenance of the upright bicycle, then you can surely handle recumbent tricycle maintenance, but remember that recumbent trikes also have many parts that require special treatment and care. Always consider your technical skills, and in case of doubt, contact your local bike shop, your local dealer or AZUB directly. This user guide mainly describes components from non-standard bicycle production, produced by AZUB. Other bicycle components, please use in accordance with the instructions from their manufacturers. These can be obtained from manuals available on the manufacturers' websites.

Whether you will be cruising around town, touring around the world, or riding with the club, AZUB's trikes are proven and ready for whatever adventure you are.

Sincerely,

The AZUB Team

2. Overview

First, we want to describe some important parts of AZUB trikes. Our two different models of AZUB trikes represent two suspension options. The rear suspension equipped TRIcon with the optional folding kit and UNI kingpins is shown below.

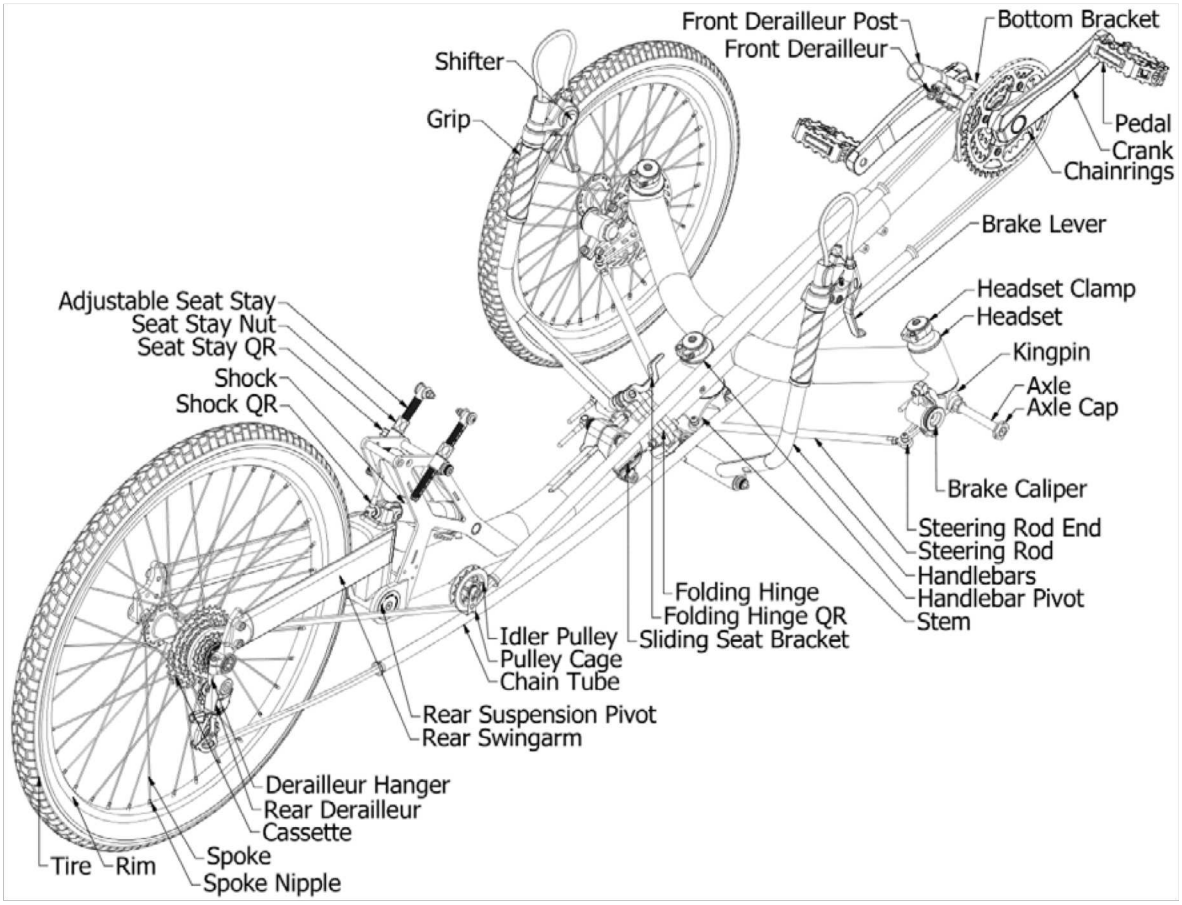

Figure 1 - AZUB TRIcon

Because we build our bikes according to the wishes of every customer, the equipment on each bike varies. In addition to many choices of drivetrain and brake components, we offer a wide range of accessories that extend the functionality of our trikes.

3. Assembly

If you got your new AZUB trike from a local dealer, it should be completely assembled and ready for its first run. The dealer should also help you with the initial setup of the trike.

If you received your trike directly from AZUB, then you have to unpack and assemble the trike on your own, but we prepared everything for you to make it as easy as possible. Front boom and chain lengths are already based on the height specified in your order, so you only need to pull all trike parts out of the box and remove the protective packaging. You should have received a split or folded (not disassembled) trike. For a split (without folding hinge) frame, follow the folding and unfolding instructions in section 5.2.1 very carefully to avoid tangling the chain or

cables. You only have to unfold or reconnect the frame, mount the wheels and seat and unfold or adjust the handlebars. After that you have to adjust seat and handlebar positions according to next chapter of this user guide.

If you ordered some accessories, they should already be installed on a bike, if their installation wasn't prevented by packaging requirements. You will also find manuals for these accessories attached.

4. Adjusting the Trike for the Rider

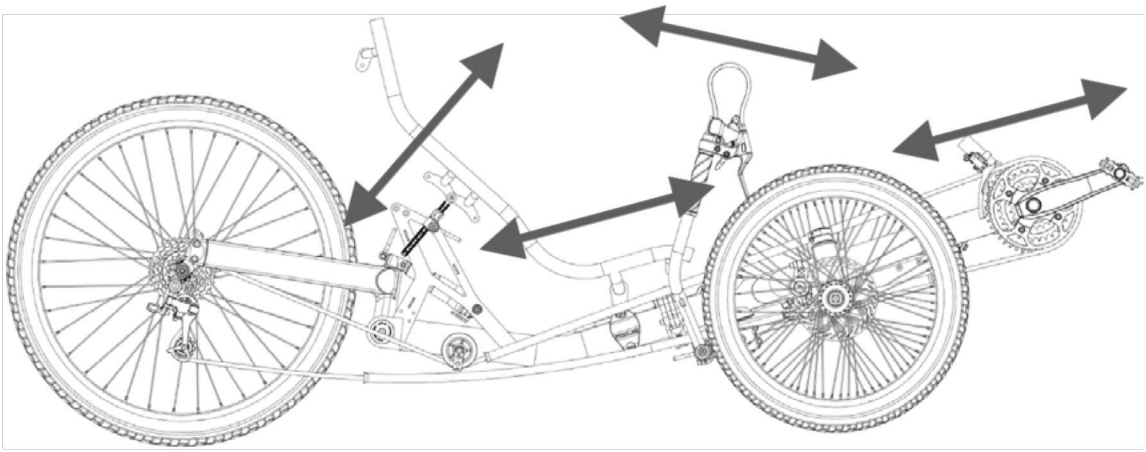

Figure 2 - Ideal Position System

4.1 Ideal Position System (IPS)

This system has made AZUB famous since the brand's foundation in 2000. It allows riders to find the right position on their AZUB recumbent through a wide range of adjustable seat positions, through the possibility of adjustment of their steering, and last but not least, through the possibility of setting their ideal frame length.

4.1.1 Front Boom

The most appropriate setting of front boom depends on many factors. Front boom position determines both seat position and position of your center of gravity. Moving your position forward increases trike stability in corners (You sit closer to the front wheels.) but lightens rear wheel (You may have problems with insufficient traction of rear wheel on slippery surfaces.). Moving your position backward is limited by the rearmost position of seat depending on seat angle or if your heels hit the frame. For the first ride we recommend using the front boom setting from when you received the trike. After few rides you may want to try to adjust your position further.

AZUB trikes' front booms are produced in regular and long versions (for very tall riders). Both lengths are equipped with a 68 mm wide ISO (British) standard bottom bracket and a 28.6 mm (1 1/8") derailleur post. The front boom is fixed in the frame by two bolts. You need a 5 mm Allen key to adjust front boom position. Adjusting front boom insertion is the first step of finding your ideal riding position. It's necessary to ride with at least the minimum boom insertion in the frame as shown in Figure 3. After you find the right front boom length, visually check horizontality of bottom bracket axle and tighten the two screws alternately until you reach the tightening torque of 8 Nm. You must check chain length after every boom adjustment, because a 10 mm change in boom adjustment, means a 20 mm change in chain length!

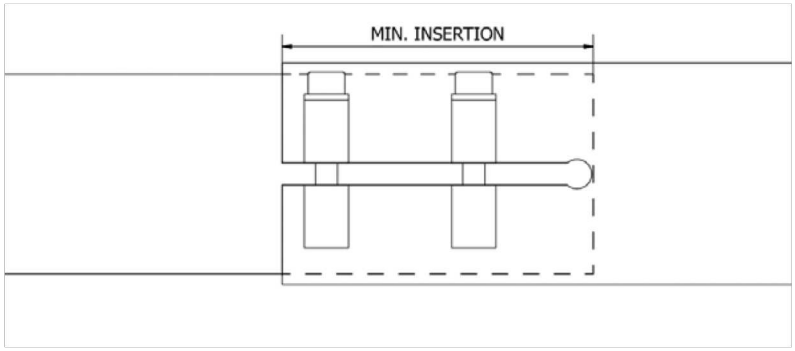

Figure 3 - Minimum boom insertion

ATTENTION!

The wrong length of chain can impair function of the front and rear derailleurs and also cause premature wear to the rear derailleur and chain.

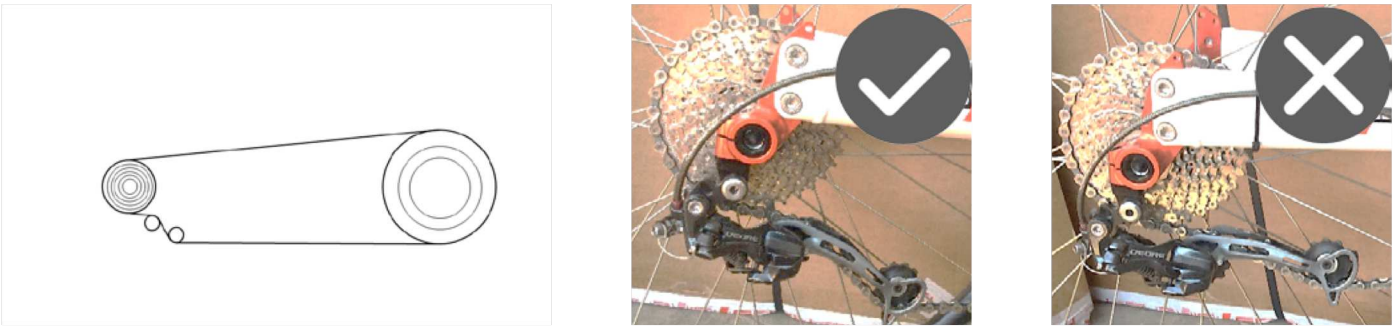

Figure 4 - Setting chain length

After boom length is set, the chain length needs to correct. It's better to have a chain that is slightly too long than too short, because a short chain can damage the rear derailleur and lock the drivetrain. With the chain on the largest chainring and cog, the chain should be long enough to be redirected around the derailleur pulleys, not pass straight through without a significant change in direction. Your component warranties may not be recognized if drivetrain damage occurs from incorrect chain sizing. If you choose to use a shorter chain length than the length

obtained with this method or neglect to adjust the chain length after moving the boom, then you must avoid shifting to gear combinations that would damage the derailleur.

4.1.2 Seat

Once you have fixed the position of the front boom, you need to adjust the horizontal seat position. There are two QR on the sliding seat bracket (Figure 5). Upper one holds the seat, lower one secures bracket on the frame. If you want to remove the seat, open the upper QR. If you want to move the sliding seat bracket (adjust horizontal seat position), open the lower QR.

TIP:
Before moving the seat clamp, clean the frame tube to prevent frame paint damage.

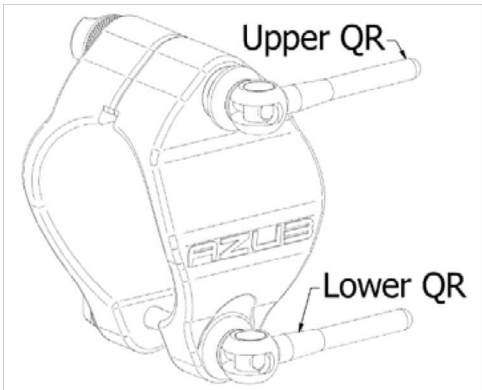

Figure 5 - Sliding seat bracket

The nuts must be on the chain side!

To adjust the horizontal seat position, you may sit with an outstretched leg and your heel on the pedal in farthest position. This setting is the most important. A short setting can cause pain in the knees. A long setting can cause problems with the ligaments behind your knees. Use the QR adjustment to find the best set up during your first runs. Figure 6 shows how to get a starting point for seat adjustment; sit and straighten your leg with your heel on the pedal in the farthest position.

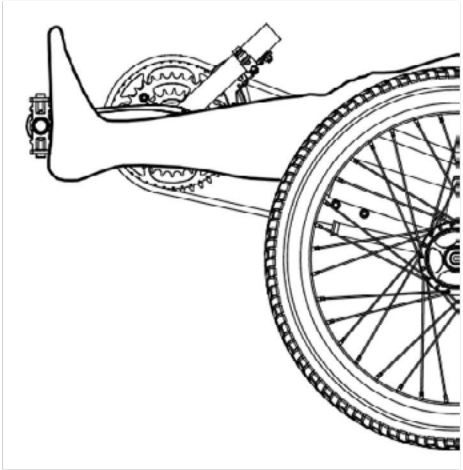

Figure 6 - Finding horizontal seat position

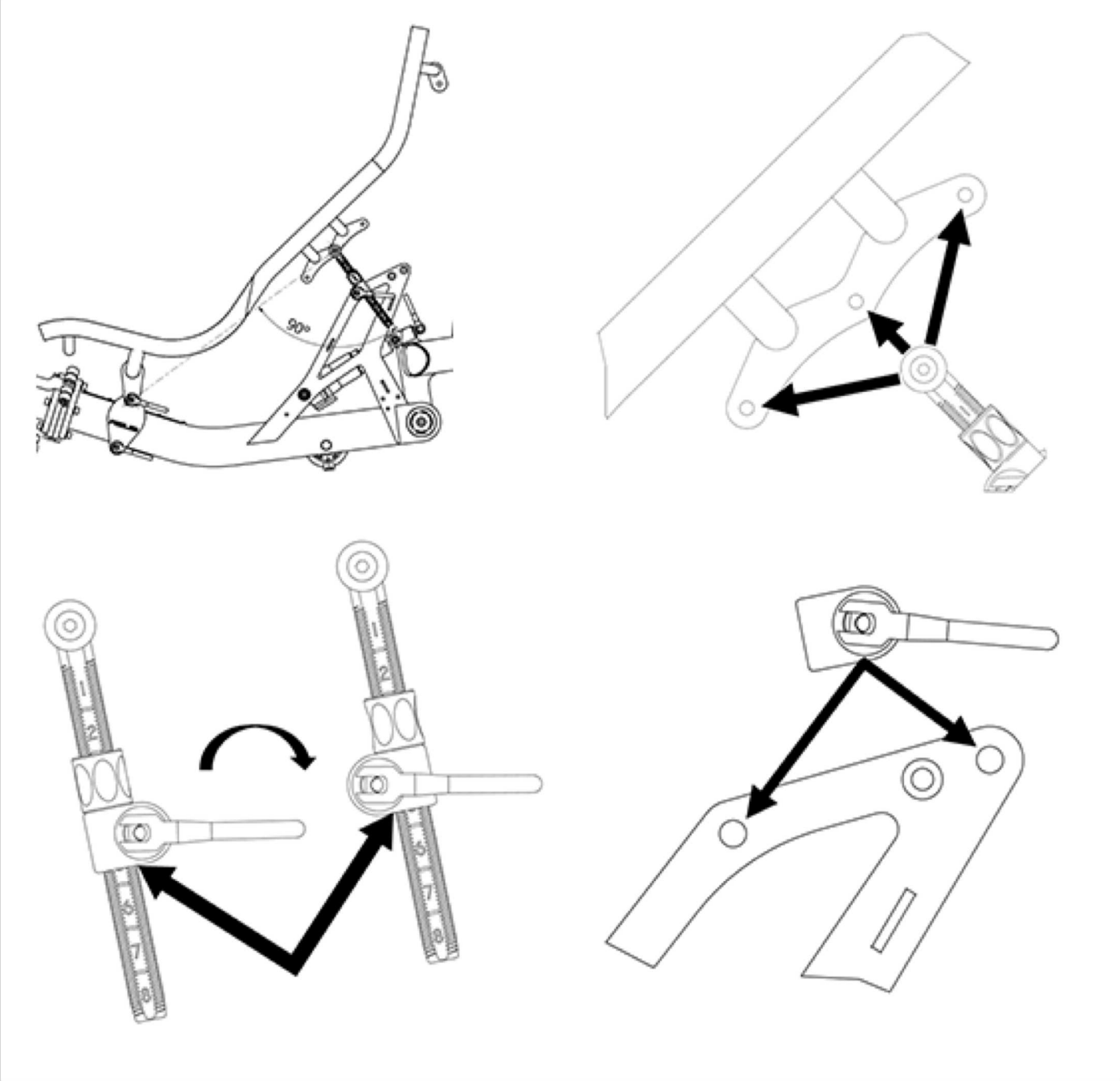

Figure 7 - Ideal seat stay position (top left) and possible seat stay adjustments

Seat angle can be adjusted with the seat stays. A more lying position gives you better aerodynamics, and a more upright position is better for hill climbing and more comfortable for your neck.

Continuously adjustable seat stays allow for precision seat angle adjustment. After loosening the QR, it's possible to move with stays in their clamps and adjust the stay adjustment nuts or completely remove the seat with stays. The QR and clamps stay mounted in the frame. After seat position is adjusted, the QR must be tightened to prevent the stays from slipping.

We recommend that you appropriately position the seat stays based on your individual settings, as shown in Figure 7. This position most effectively supports the trike seat. To achieve this angle, there are two different mounts on the frame, three positions on the seat and the seat stay clamps can be flipped resulting in twelve possible configurations shown in Figure 7.

Occasionally check that the seat mesh is properly tightened. If the mesh isn't tight enough, then your back will touch the seat frame. You can retighten the mesh with the straps in the back.

4.1.3 Steering

The last adjustment is the handlebars. Find the most comfortable position and see if you are able to reach handlebars with both hands when the wheels are turned completely. You can also adjust the brake levers' positions as on a typical bicycle. To adjust the handlebars, loosen the four bolts on the handlebar position adjustment, move the handlebars, retighten the two bolts alternately. The folding handlebars are also adjusted this way. The quick release folding mechanism is only for folding, not for adjustment.

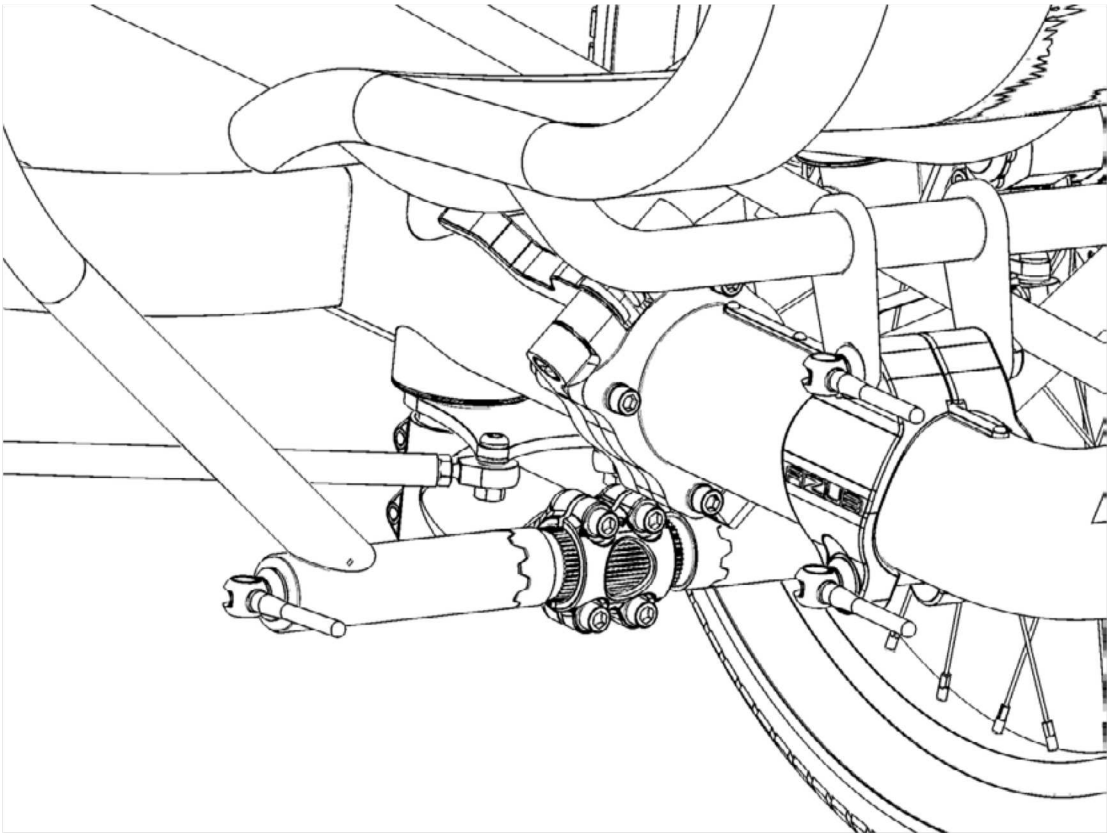

Figure 8 - Handlebar adjustment

4.2 Tires

On a trike, you can use lower tire pressures than on a bike because your weight is spread over three wheels. You can try higher pressures for less rolling resistance or lower pressures for a more comfortable ride. Never inflate the tires more than the maximum pressure stated on the tire sidewalls.

4.3 Suspension (TRIcon Only)

The AZUB TRIcon features an adjustable rear suspension with ##mm of travel for the 20" version and ##mm of travel for the 26" version. Suspension settings depends on rider and luggage weight and also on your riding preferences. Sag is the measurement of the used suspension travel when the vehicle is loaded at rest. It is measured in percentage of total travel. For the most comfortable ride, we recommend adjusting the shock to 50% sag, for a more sporty feeling use 30% sag.

How to set suspension sag:

- Air shocks typically have an O-ring on the shock body or fork upper tube, but if there is no O-ring, you can use a zip tie temporarily. Before sitting on and loading your trike, slide the O-ring or zip tie against the scraper lip of the air sleeve. Be sure to turn off ProPedal or lockout on the shock, as applicable.
- Without bouncing, sit on your trike. Assume a normal riding position for at least 30 seconds to let the suspension fully settle. The O-ring or zip tie will be moved to the equilibrium point on the shock body, as the suspension settles under your weight.
- With a coil spring shock, have a friend measure the compressed length of the shock.

$$\frac{UncompressedLength - CompressedLength}{TravelLength} \cdot 100\% = sag$$

- This step is critical for getting an accurate sag measurement. Dismount your trike without bouncing or pushing downward to avoid displacing the O-ring or zip tie farther.
- Measure the distance between the scraper lip and the O-ring or zip tie, and divide that by the total active travel of your shock or fork to get the sag percentage.

With the DNM coil spring shock, you can adjust sag by changing spring preload. With an air shock, you can adjust sag by changing pressure. With air shocks you are also able to adjust rebound. Try different rebound settings to find one that fits you best. Air shocks also offer a lock-out option. Use this only on smooth uphill surfaces. Don't forget to unlock the shock before riding downhill or before riding rough roads. Riding rough roads with the shock locked can damage the shock.

5. Using Your Recumbent Trike

Before Every Ride Check:

- Brakes
- Steering Tightness
- Quick Releases

5.1 Riding Basics

Always try to be visible for other road users. We recommend mounting a highly visible flag on pole to your trike seat. A flag can be easily mounted by drilling through the cap on the end of the seat rail to insert the flag. Due to your low seat height, visibility is a concern, because you can be hidden and other drivers cannot always see you. Drive defensively.

5.1.1 First Ride

We strongly recommend that you take your first ride out of traffic. Don't hurry. It will take some time to get familiar with your new trike.

It's easier to get on and off the trike if it is positioned slightly downhill with the parking brake activated. If you have mechanical brakes (drum or disc), pull the brake levers then press down brake lever locking pins. To release the parking brake, pull the brake levers again.

When getting on the trike, stand in front of the frame's front arms with one leg on each side of the front boom while looking forward, then carefully sit down. Try to avoid pulling on the handlebars. You can grip the front wheels or seat to stabilize yourself. Before every ride, test the brakes and steering.

Start riding with low gears and increase your speed slowly, and try to get familiar with trike handling before riding in to the traffic. Read this guide completely to understand recumbent trike riding techniques and tips.

TIP:
Do not pull on the handlebars when pedaling, instead focus on pushing back into the seat. Relax and sit back into the seat. Don't crouch forward.

ATTENTION!
Keep your feet on pedals when the trike is moving; never try to slow down with your feet. Your feet could be caught on the ground and pulled under the frame front arms which could lead to a serious injury. We strongly recommend using clipless pedals with compatible cycling shoes.

5.1.2 Cornering

Despite having three wheels and static stability, you need to lean into turns and cambered roads. On a bicycle, you must lean to turn or balance, and on a trike, the same principle applies but may take more discipline to always include in your riding.

Do not ride handsfree! You can only safely control the trike with both hands on the handlebars.

Carefully try to find stability limits while you are cornering. When you ride too fast in a corner or do not lean enough, the inside front wheel can lift, and in the worst case the trike will roll over. When you feel that the wheel will lose contact with the road, you must turn less or decrease your speed. Road camber and/or bumps can also negatively affect trike stability in corners.

ATTENTION!
Avoid riding the trike on two wheels. It is possible, but it places severe stresses on the wheels, and you will not be able to control the trike properly.

Trike stability can also be negatively affected by heavy loads on the rear rack. Always try to put heavy loads as low and forward as possible.

5.1.3 Braking

Each brake lever operates its respective brake: left lever for the left brake, right lever for the right brake. When you are going straight, use the same braking power on both brakes to obtain the shortest stopping distance. Practice this emergency braking a few times out of traffic. You must remember that it is very easy to skid the inside wheel in a corner. Try to balance braking power on the outer and inner wheel to reach the shortest stopping distance in the corner.

CAUTION!
The brakes are powerful, and if they are applied sharply then the rear wheel can lift. This can result in some loss of directional control.

You may find it very fun to ride your trike on slippery surfaces such as ice and snow. Trikes give you maximum stability, but remember that your stopping distance will be much longer, and you can't steer when your front wheels are skidding.

Brake drums, calipers and rotors will heat up when they are used. Do not touch them while riding or immediately after riding.

5.1.4 Shifting

It's a good habit with every type of a bicycle to shift to a low gear before stopping. You can then pull away easily when you start again. While riding it's recommended to keep your pedaling cadence between 80-100 rpm. Try to look forward and shift before hills to avoid changing gears under pressure.

Standard shifting systems can only shift when the bike is being pedaled, but hub gear systems can be shifted while stopped, pedaling, or coasting.

Azub trikes can be equipped with many different gearing systems. For further information, read the manuals from their manufacturers.

5.1.5 Riding Downhill

Use caution on downhill rides. It is not unusual to reach speeds of over 70 km/h on steep descents. You will find that you can go faster with much more confidence once you become acclimated to the way the machine handles. Because there is less air resistance in the recumbent position, you will go faster than an upright bike.

CAUTION!

Drum brakes can overheat on long, steep descents. If you feel the brakes start to weaken on a descent, then stop and allow the brakes to cool before continuing.

5.1.6 Beginning with Recumbents

Now, everything is going well, and you can easily ride around your house or block of flats. Perfect. You plan your first trip. Plan it carefully because you will likely have some problems with long distances or steep hills. Riding too far before your body is trained can result in temporary joint and muscle pain.

Most people new to recumbents go through three periods:

1st period – Passion: You can easily ride around the house and a few kilometers without any hills. You feel that the recumbent is very good bike, and you wonder, "How could I ride a regular bike so long?"

2nd period – Deep Depression: Your first trip with some hills and some more kilometers will completely change your mind. You will have problems pedaling half of your standard distance and the pain in your legs will be terrible, but you have to train!

3rd period – Trained: Now you are definitely a recumbent rider. You can easily cycle long distances. Hills are no problem for you, and you again feel that recumbents are very good, fast and comfortable bikes with many advantages and some disadvantages.

So what is the problem?

It's simple. When riding recumbents you use some other muscles than on an upright bike, and these muscles are not trained. It's the same as starting a new sport. You have to train, that's it. Also you have to get used to a new style of pedaling and a new bike. That means that if you would like to go for a long trip soon after buying your first recumbent, then we recommend that you use your upright bike and try your recumbent for long distance after some time and training.

Also you have to notice, that you cannot use your body weight when pedaling, so you must have well trained legs, but on the other hand, your legs will be trained much sooner and will be stronger.

5.1.7 Riding with Cargo

With the rack and bag options that we offer, you can comfortably carry a significant load on your trike. It's important to keep your heavy cargo as low, forward, and centered as possible. Remember to allow for longer stopping distances with cargo and slower cornering.

5.1.8 Riding Off-Road

Your trike may not be intended for big drops or harsh descents, but depending on your tires, it is suitable for riding many dirt or gravel roads. Be aware that with a trike you must lean into cambered trails. On a bicycle you would do this naturally, and you can ride at an angle to the road surface, but trikes can be unstable at high cambers before bikes would have a problem.

5.2 Living with Your Recumbent

Unfortunately not all life with your new recumbent will be spent in the driver's seat, so this section of the manual goes over some other aspects of owning your new trike.

5.2.1 Folding

This section describes how to fold Azub trikes equipped with the optional folding handlebars and frame folding hinge. Azub trikes come standard with separable frames; these instructions apply to trikes without the folding option, but they require a 5 mm Allen key to loosen the handle bars and separate the frame. Should you decide to upgrade to a folding trike, the folding hinge and handlebars can be added later.

TIP:
Before folding or separating the frame, always set the parking brakes and shift to a small gear combination.

ATTENTION:
Keep the mating surfaces of the hinge and handlebars clean to ensure proper operation.

5.2.1.1 Folding Hinge and Handlebar

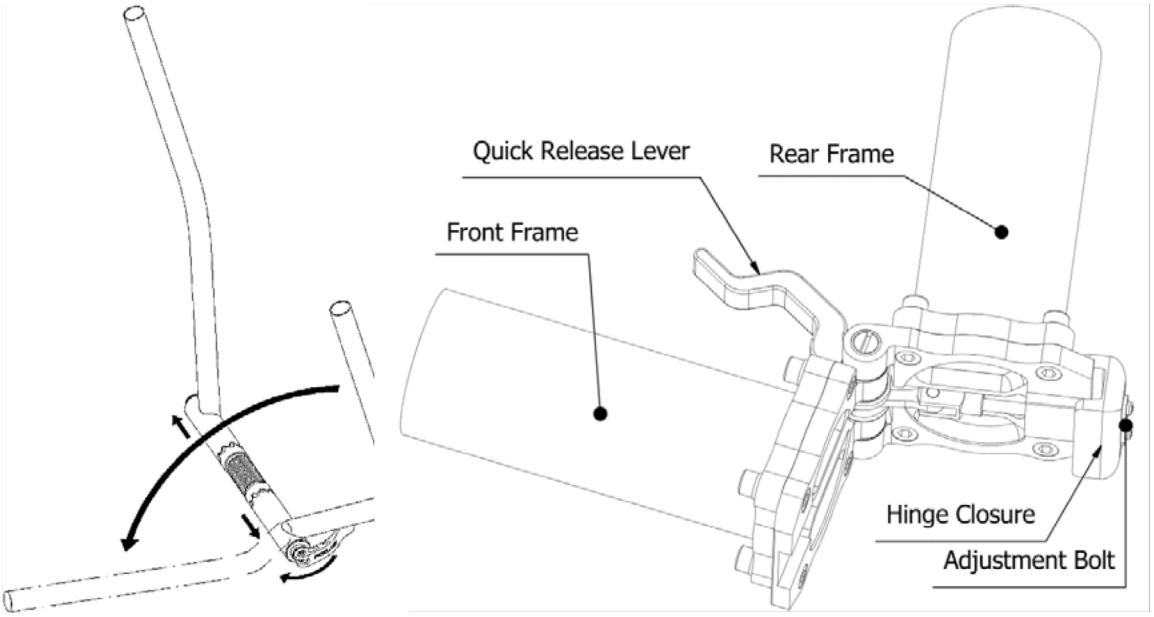

Figure 9 - Folding handlebars and frame hinge

Setting up folding handlebars follows the same procedure as for one-piece handlebars. To fold handlebars you need to open the QR lever, unscrew it a bit (about 10 revolutions), and then pull the left and right handlebars from the

securing teeth (Sometimes this requires a tap with the base of your hand.). Then both handles can be rotated separately (Figure 9).

The Azub trike folding hinge features a large QR lever for easy folding. To fold the frame, simply open the QR. Unfolding operation is the same in reverse order. If the QR becomes too loose or too tight, then the QR length needs adjusted. Use an Allen key to adjust length of the hinge locking mechanism.

5.2.1.2 T-Tris

Follow these steps to fold T-Tris trike:

1. Open and loosen the upper seat clamp QR and the seat stay QR then remove the seat (See section 4.1.2 on page 5).
2. Open and loosen the handlebar QR and fold the left handlebar backward (Figure 10).
3. Fold the frame using frame hinge. In some cases, the seat clamps collides with the frame. If that occurs, move sliding seat bracket forward before folding the frame.
4. Fold handlebars forward (Figure 10).
5. Optionally, the front wheels can be removed (See Section 6.2).
6. For 26" rear wheels, removing the rear wheel further reduces the folded size.

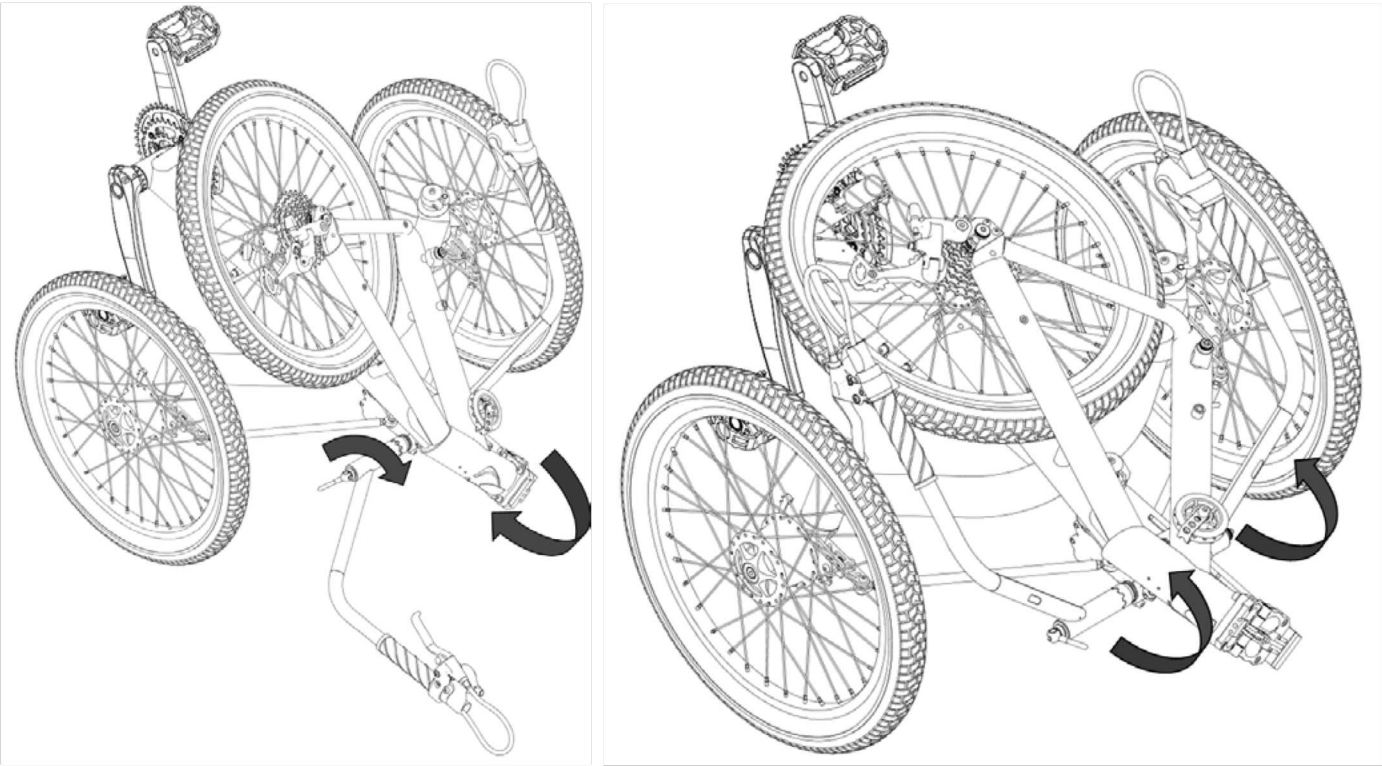

Figure 10 - Move left handlebar backward, fold the frame, then fold the handlebars forward

Unfolding is the same in reverse order.

5.2.1.3 TRIcon

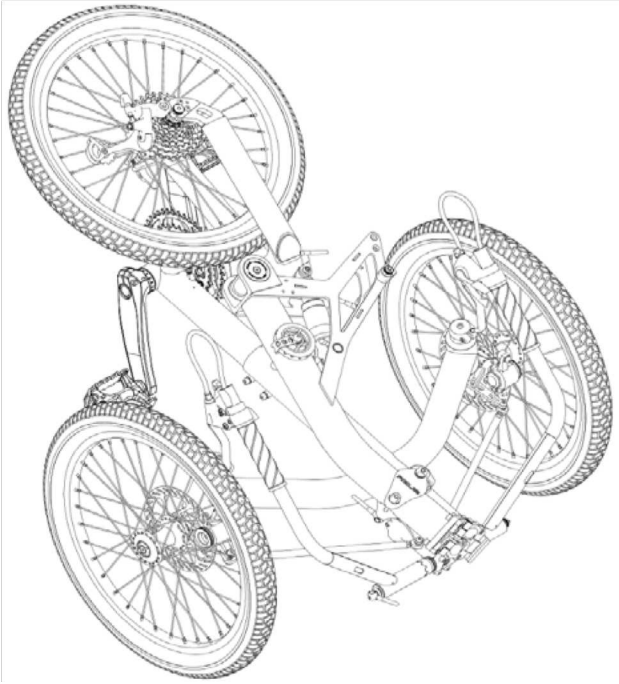

Figure 11 - Quick folded TRIcon

There are two options when folding the AZUB TRIcon. The first one is quick folding. In this case, you don't need to remove the rear wheel or the standard carrier. To reach minimum folded size, extreme folding can be used. In that case, you will remove all the wheels and fold the rear fork.

How to remove the rear wheel with the Syntace X-12 system:

1. Locate the tool labeled "Syntace" in the non-drive side of the axle.
2. Using two fingers, pull the tool straight out of the axle (Note: Wiggle the tool using the exposed handle if it is too difficult to remove.).
3. Insert the 5 mm hex end of the tool in the axle and turn counter clockwise.
4. Slide the axle out and remove the wheel, taking care to remove it from the chain.
5. Reassembly is the same in reverse. When placing the tool in the axle, be sure it is seated, no turning is necessary.

Follow these steps to Quick fold TRIcon trike:

1. Open and loosen the upper seat clamp QR and the seat stay QR then remove the seat (See Section 4.1.2 on page 5).
2. Fold the handlebars forward.
3. Fold the frame using frame hinge. In some cases, the seat clamps

collides with the frame. If that occurs, move sliding seat bracket backward before folding the frame.

4. Optionally, the front wheels can be removed.
5. For 26" rear wheels, removing the rear wheel further reduces the folded size.

Unfolding is the same in reverse order.

Follow these steps to Extreme fold the TRIcon trike:

1. Remove the seat (See Section 4.1.2).
2. Fold the left handlebar backward.
3. Remove the rear wheel.
4. Open the rear shock QR, disengage the shock from the swingarm, and fold the rear swingarm (Figure 12).
5. Fold the frame using the frame hinge
6. Fold the handlebars forward.
7. Optionally front wheels can be removed (See Section 6.2)

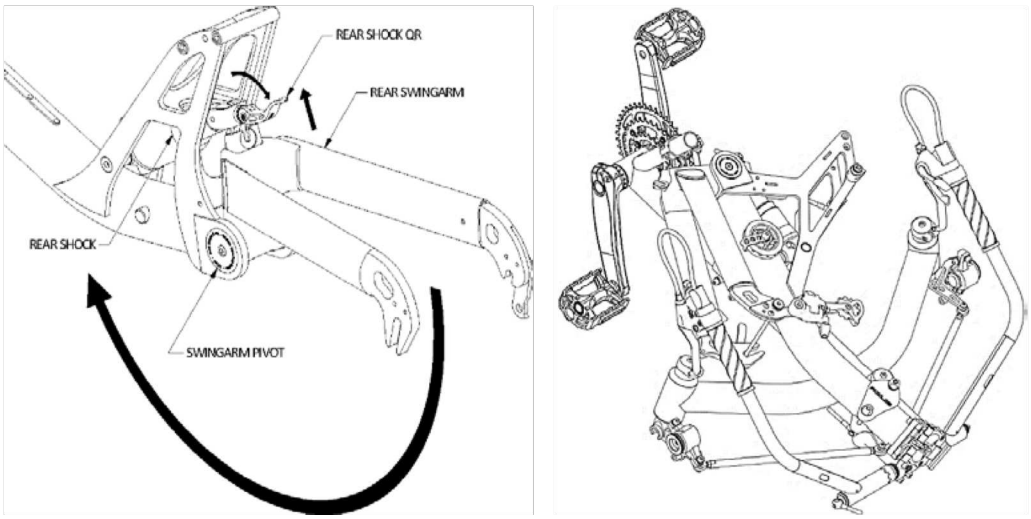

Figure 12 - Rear swingarm folding and extreme folded TRIcon

Unfolding is the same in reverse order.

5.2.2 Transportation

When you want to transport your trike by car, use its folding option. With the seat removed, the trike will be lower and can be transported inside many types of cars. We also recommend to removing the seat if you transport the trike on the roof of your car, and please remove any parts that could come loose during transport. There are trike specific racks available to transport your trike with your car's hitch or on the roof.

5.2.3 Storage

Do you know?

Before storing your recumbent for more than a few months, we recommend that you clean and dry the bike and ensure that the cables, chain, and any pivots are lubricated to prevent corrosion and seizure. Bicycles should be stored in a clean, dry place to best preserve them for your next ride. Shift to the small sprocket and chainring to relax the derailleur system. Ensure that the tires are full because sitting on flat tires can damage the tires. Any bike not properly stored can emerge in much worse condition than bikes ridden many kilometers in that time.

5.2.4 Loading and Trailers

Azub trikes and their carriers are not suitable for carrying a child seat. This can be very dangerous for the child because the high position of the seat can cause trike instability. We recommend using a trailer for children and heavy loads. It will be much safer and more comfortable for your little passengers.

5.2.5 Tools and Spares

At Azub, we take pride in our customers around the world travelling great distances on our bikes and trikes. This section lists some of the tools we recommend you carry for long trips. Your needs may be different, and this list provides a starting point for your spares and toolkit. Remember to plan ahead and be knowledgeable about the challenges you may face on your adventure.

Tools

- Multitool including:
  - Chain tool
  - Tire levers
  - Spoke wrenches
  - Assorted hex keys and wrenches
- Cassette lockring tool
- Zip ties
- Duct tape

Spares

- 1 tire for each tire size
- 2 inner tubes for each size
- 3 spokes for each size
- Derailleur hanger
- Brake pads
- Brake and derailleur cable
- Chain, about 20 cm
- Nuts and bolts

6. Mechanical Guide

This section shows how to adjust, assemble, and maintain various components of your recumbent. Before your first ride, we strongly recommend that you read the manufacturers' instructions related to all the components which are

used on your bike, especially the brakes and shifters.

It is common that some components need adjusted after a few hundred or thousand kilometers. If you are not an experienced mechanic, then it is often better to go to your favorite bike shop and have the bike serviced there. There should not be any issues if the bike shop is not associated with recumbents because most of the components are the same as on the typical bikes.

6.1 Maintenance Schedule

After 200 km (120 mi.) or one month it is necessary to have your new bike serviced where all components will be adjusted as necessary, the spokes tightened, and the rest of the bike inspected.

On the next page you can find a table of the inspections, adjustments and repairs which we recommend that you make a part of using of your new recumbent. Depending on your use and environment, your trike may require service more or less often than suggested here. This is typical of all bicycles, and this chart provides a starting point for maintenance. Some of the setting or checking you will be able to do on your own, but some is better handled by your local bike shop.

Scheduled Maintenance/Inspections		
Every week or 200 km	**Every month or 1000 km**	**Every 6 months**
• Check tire pressure • Inspect the chain for cleanliness and lubrication • Check the headset • Clean suspension stanchions	• Wash and dry the bike • Check the chain for wear • Clean and lube the chain • Inspect the brake pads for wear • Inspect the tires for wear or damage • Check wheel trueness and spoke tightness • Check that all bolts are tight	• True the wheels • Clean and lubricate cables Adjust derailleurs/shifting • Inspect and lubricate the headset • Check bottom bracket • Lubricate pedals (if applicable) • Clean, lubricate, and adjust suspension

6.2 Kingpins

AZUB produces two different models of kingpins. They are the part of trike steering system, which holds the front wheel axle. Kingpins sit in the frame on standard semi-integrated 28.6 mm (1 1/8") headsets.
The standard kingpin allows only Sturmey Archer drum brake mounting and uses a fixed axle. To mount or dismount the front wheels you need an 18 mm wrench and a 6 mm Allen key.

Removing a front wheel with standard kingpins (Figure 13):

Remove the inner self-locking nut, then unscrew the wheel axle using 18 mm socket wrench. Don´t lose the inner spacer and remember its orientation. The drum brake mechanism will remain mounted on the kingpin.

Mounting a front wheel with standard kingpins (Figure 13):

Put everything together as shown in Figure 13, then tighten axle with 50 N·m. Hold the axle with the socket wrench and tighten the self-locking nut with 40 N·m.

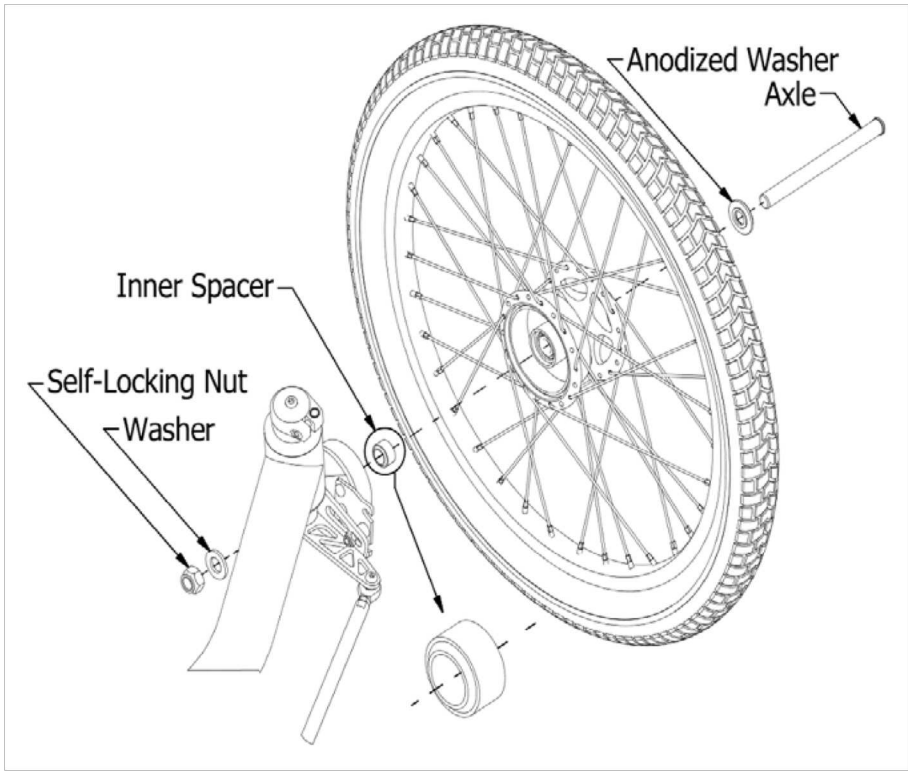

Figure 13 - Standard kingpin and drum brake assembly

AZUB UNI kingpins allow either drum or disc brakes. They also allow using the SON hub dynamo (only with disc brakes). Thanks to using QR axles, wheels can be mounted and removed without tools.

Removing a front wheel with disc brakes:

1. Disconnect the cable from hub dynamo, if it's installed.
2. Open the QR, and unscrew it a bit (about 5 revolutions) (Figure 14).
3. Remove the wheel with QR axle (Figure 14).
4. If you have hydraulic brakes, then we recommend using pad spacers between the brakes pads to prevent of brake line aeration.

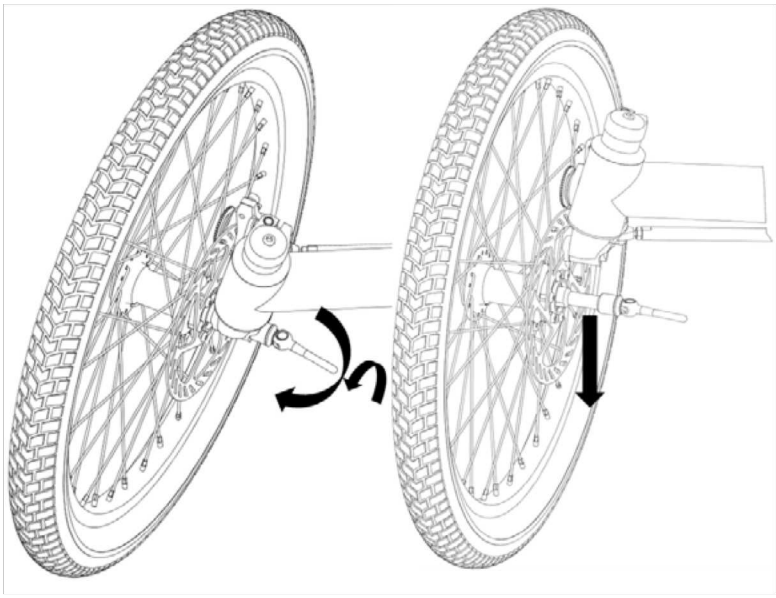

Figure 14 - Removing front wheel with QR axle

Mounting a front wheel with disc brakes:

1. Remove pad spacer from brake caliper (If applicable), then carefully slide the rotor into the brake caliper and wheel axle into the kingpin.
2. Tighten and close QR lever firmly. The closed QR lever should point rearward. Use the hub cover to rotate the QR with the QR open to orient the lever properly (Figure 15).
3. Connect the cable from hub dynamo (If applicable).
4. Always test the brakes and ensure that both front wheels are secure before riding.

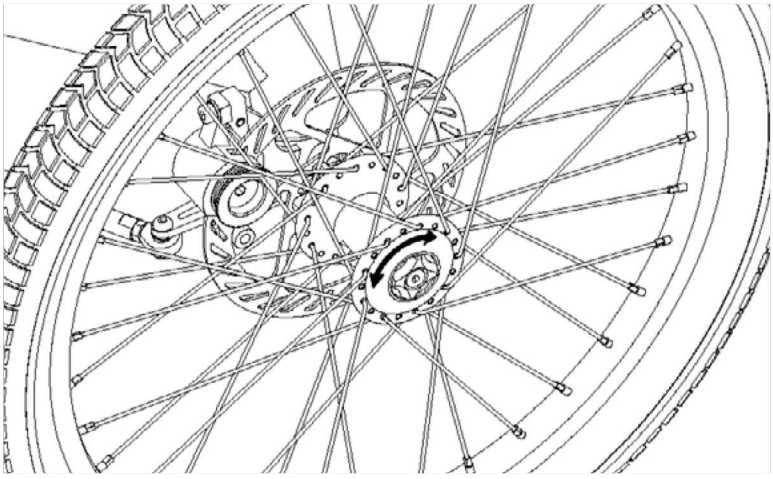

Figure 15 - Setting QR lever orientation

Removing a front wheel with drum brakes:

1. Disconnect the cable from drum brake at the wheel.
2. Open the QR, and unscrew it a bit (about 5 revolutions) (Figure 14).
3. Pull the wheel down to get axle out of the kingpin.
4. Pull the wheel out to disengage the drum brake from the kingpin's fixing pin (Figure 16).

Mounting a front wheel with drum brakes:

5. Align the back drum brake on kingpin's fixing pin then axle in the kingpin.
6. Tighten and close the QR lever. The closed QR lever should point rearward. Use the hub cover to rotate the QR with the QR open to orient the lever properly (Figure 15).
7. Reconnect the brake cable to the drum brakes.
8. Always test the brakes and ensure that both front wheels are secure before riding!

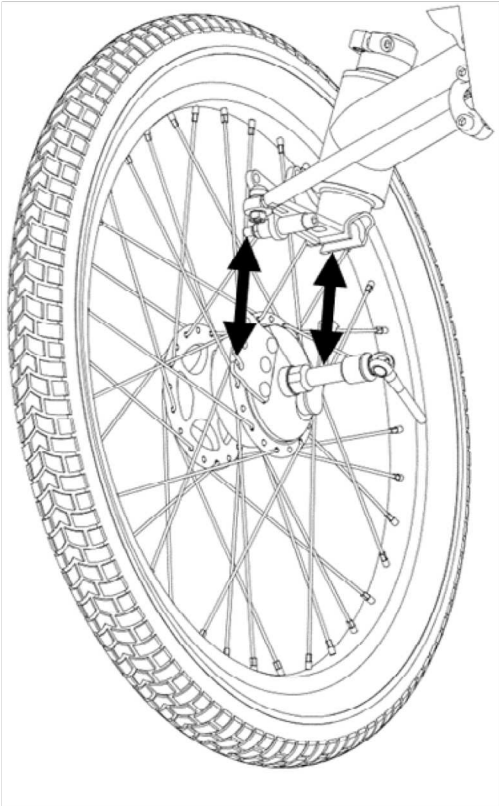

Figure 16 - Drum brake fixing pin

6.3 Wheels

Always check that the quick releases are tight when reinstalling wheels. Most wheels on our bikes are equipped with sealed bearings (Novatec, SON hub dynamo) which are maintenance-free. The SRAM DualDrive, Rohloff, and Shimano Alfine hubs require different procedures to remove and install as detailed in this section. For additional information, consult the manufacturers' manuals.

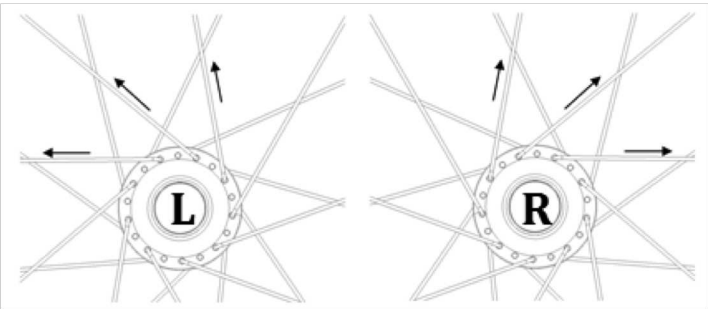

Figure 17 - Left and right wheels

To prolong spoke life, the front wheels should be mounted on their optimal sides. When looking at the outside of the wheel, the outside spokes should match the orientation shown.

Spokes must be tight, and it is common that after the first 200 km they need to be retightened. After tightening you need to check if the wheel is true. If not, then it needs to be trued which should only be done by an experienced mechanic.

Azub recumbents come with Schwalbe tires which we have successfully tested through many expeditions. We recommend Schwalbe balloon tires which can provide a very comfortable ride in combination with low rolling resistance. When changing tires or tubes note the proper range of tire pressure and the "drive" direction on the sidewalls of the tires.

6.3.1 26 Inch Rear Wheels

If your trike is equipped with a through-axle 26" rear wheel, then the system for removing it may be different than what you are familiar with. With 26" rear wheels on trikes, AZUB uses the Syntace X-12 axle system with the integrated X-Fix tool.

How to remove the rear wheel with the Syntace X-12 system:

1. Locate the tool labeled "Syntace" in the non-drive side of the axle.
2. Using two fingers, pull the tool straight out of the axle (Note: Wiggle the tool using the exposed handle if it is too difficult to remove.).
3. Insert the 5 mm hex end of the tool in the axle and turn counter clockwise.
4. Slide the axle out and remove the wheel, taking care to remove it from the chain.
5. Reassembly is the same in reverse. When placing the tool in the axle, be sure it is seated, no turning is necessary.

6.3.2 SRAM DualDrive

How to remove the rear wheel with the SRAM DualDrive system:

1. Place thumb shift lever in hill riding mode.
2. Push the black button on the clickbox down and pull the clickbox off the axle.
3. Loosen the axle nuts and remove the wheel
4. Unscrew the shifting rod.

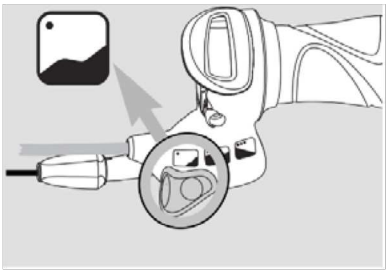

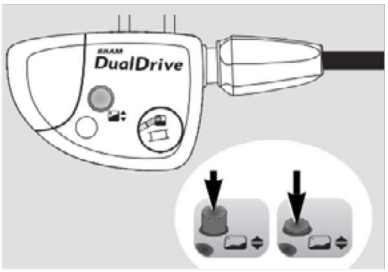

How to install the rear wheel with the SRAM DualDrive system:

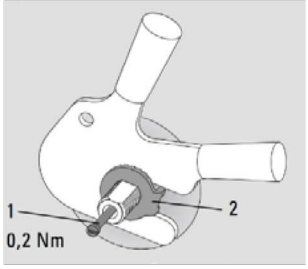

1. Install the wheel in frame dropouts.
2. Place retaining washers (2) on both sides of the axle – the serrations must bear against the dropout.
3. Tighten the axle nuts. Tightening torque 30 – 40 Nm (266 – 350 in. lbs.).
4. Screw shifting rod (1) into the hub axle and tighten it to 0.2 Nm (1.8 in. lbs.).
5. Push the Clickbox to the stop on the hub axle. The thumb shift lever must be positioned in the hill riding mode and Clickbox button must be pushed down.
6. Bring Clickbox button back to initial setting by pushing it up from underneath.

6.3.3 Rohloff Speed Hub

How to remove the rear wheel with the Rohloff Speed Hub:

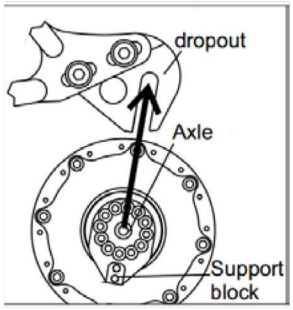

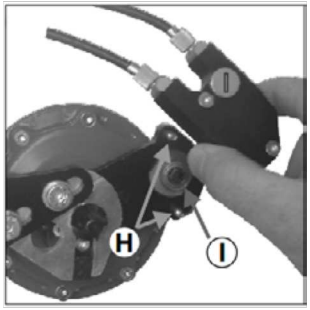

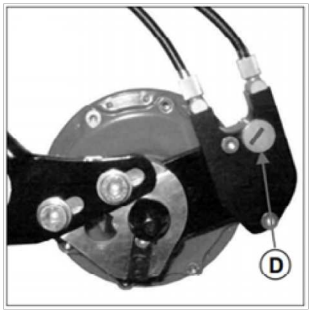

1. Separating the gear mechanism from the wheel involves removing the cable box. The cable box sits over a hexagonal peg which joins it to the external transfer box. The wheel should be removed in gear #14 to make remounting the wheel easier. Loosen knurled head screw D and remove cable box E.
2. Open the quick release lever.
3. Loosen the chain tensioner mounting bolt then pull the tensioner backwards while removing the wheel.

How to install the rear wheel with the Rohloff Speed Hub:

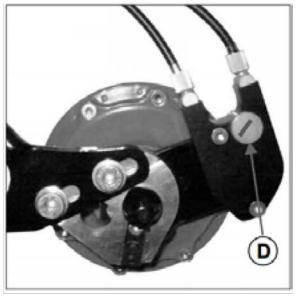

1. Place the wheel into the dropouts as shown, taking care that the chain is on the sprocket properly. Remember to pull the chain tensioner back to insert the wheel.
2. To remount the cable box, place the twist shifter in gear #14 then place the cable box over the hexagonal peg I, so that the two locating pegs H sit into the two holes in the back of the cable box. Turn the twist shifter back and forth around gear #14 until the cable box falls into place over the hexagonal peg.
3. Tighten up the knurled head screw.

6.3.4 Shimano Alfine Hub

How to remove the rear wheel with the Shimano Alfine Hub:

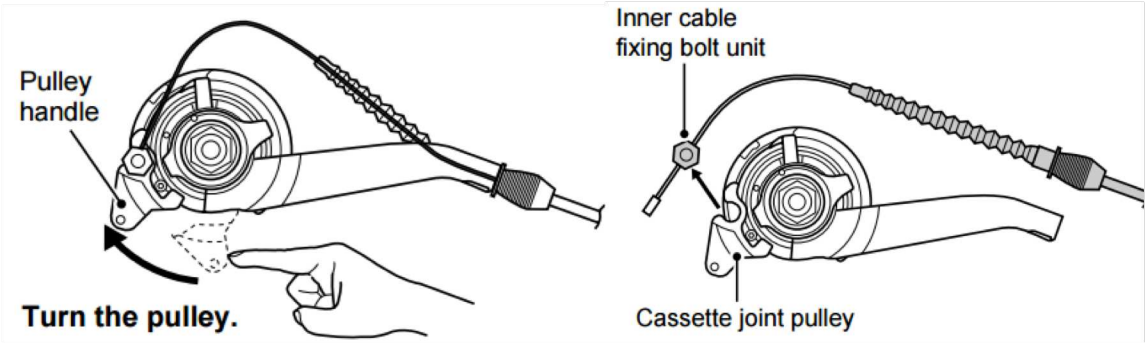

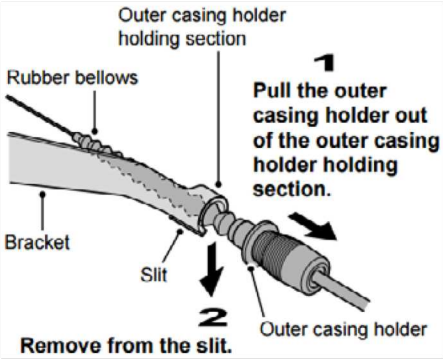

To remove the rear wheel with the Alfine Di2 electronic shifting system, use the Shimano TL-EW02 Di2 E-Tube Plug Tool to remove and attach the electronic cable to the hub.

1. Shift to the highest gear to release the tension on the shifting cable.
2. Push the lever of the pulley clockwise.
3. At the hub, pull the cable housing out of the cable stop.
4. Remove the inner cable fixing bolt from the joint pulley.
5. Loosen the axle and remove the wheel.

How to install the rear wheel with the Alfine Hub:

1. Reinstall the wheel in the dropouts, ensuring that the lock washers are in the dropout and the axle nuts are torqued to
2. Bring the cable around to the pulley, hold it so that the inner cable fixing nut is facing to the outside (toward the frame end), and then slide the flat part of the inner cable fixing washer into the gap in the pulley.
3. Attach the inner cable to the pulley as shown in the illustration, pass the part of the inner cable which has the rubber bellows attached through the slit in the cassette joint bracket, and then insert the outer casing holder securely into the outer casing holder holding section. Be careful not to damage the rubber bellows.

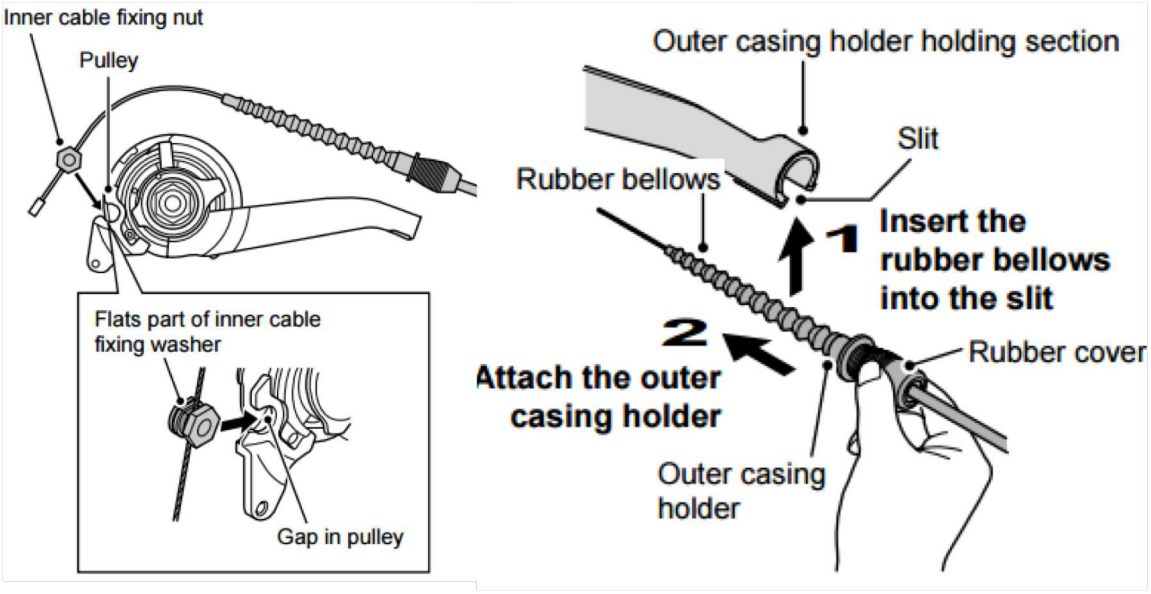

6.4 Brakes

Before each ride check that your brakes function properly. If you find any problem, then it should be repaired immediately. Brakes are critical to the safety of your bike, so they must be in proper condition any time you are using your bike. Brake pads wear from use and must be changed according to the brake manufacturer's instructions.

6.4.1 Disc

You can find two types of disc brakes on our trikes. Mechanical brakes from Avid and Hydraulic brakes from Tektro. Service manuals for both of these brakes can be found on their manufacturers' websites. After storage or shipping, hydraulic brakes may need to be "pumped up." To do this, squeeze the brake levers several times until the brakes do not feel spongy.

6.4.2 Drum

Sturmey Archer's drum brake systems are very reliable and durable. You only need to check the cables and their connection to brake. You can only adjust the length of the brake lever travel. Be sure that brake lever does not touch the grip under maximum braking force.

6.5 Drivetrain

6.5.1 Shifting

We offer several different shifting systems. Many AZUB trikes come with Shimano Alivio (24 speeds) or Shimano Deore (27 speeds) components, but you can also have the SRAM DualDrive system, the 11 speed Shimano Alfine hub, or the 14 speed Rohloff hub. Service manuals for all shifting systems can be found on their manufacturers' websites.

It is common that after the first 200 km (120 mi.) the shifting and brake cables stretch and need to be readjusted. Your local bike shop should be able to make all the necessary adjustments.

We recommend that you to keep all cables clean and occasionally oil them to ensure that the shifting and braking systems function properly.

6.5.2 Chain

The chain has to survive high stresses. Because of this, you should maintain the chain and check it for wear. Because when the chain is worn out, it damages the chainrings, cassette and derailleur. We recommend that you lubricate the chain periodically. How often you lubricate the chain depends on what lube you use, where you ride, if the chain is exposed to water, and how far you ride. Some riders clean and lube their chains biweekly while others only lubricate their chain every season. If your chain is noisy, then it likely needs cleaned and lubricated. When lubricating the chain you have to clean the chain before lubricating it, and after the lubricant has soaked into the rollers, wipe the chain side plates dry. Any oil on the outside of the chain only attracts dirt and does not help lubricate the chain.

Use a chain wear gauge to check the wear on your chain. If the chain is worn out, then change it immediately. Recumbent chains are about 2.5 times the length of the standard chain length sold for typical bicycles.

Chain tubes protect your legs and trousers from the oil and dirt on the chain. When your chain tubes are worn out, contact Azub to purchase replacements.

6.5.3 Bottom Bracket

All Azub recumbents are equipped with sealed cartridge bottom brackets which are maintenance-free. You can check the BB by shaking the pedals as shown in the figure. If you feel any play, then the bottom bracket should be changed.

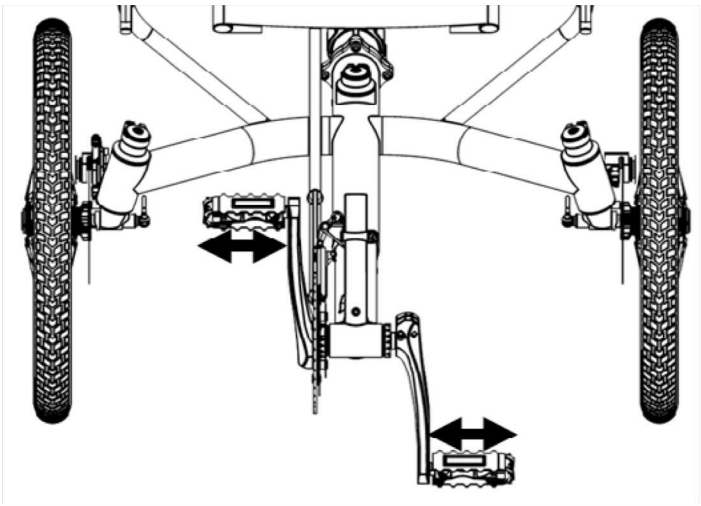

6.6 Suspension and Steering

6.6.1 Headsets

The kingpins sit in the frame in headsets. Azub uses standard semi-integrated 28.6 mm (1 1/8") headsets. The easiest way to check if everything is alright is to hold the brakes and try to rock the bike back and forth. If you feel and see some play between the kingpins and frame, then the headsets need tightened.

If you feel some play in the handle bars it can be caused by a play in the handlebar pivot which is also a headset.

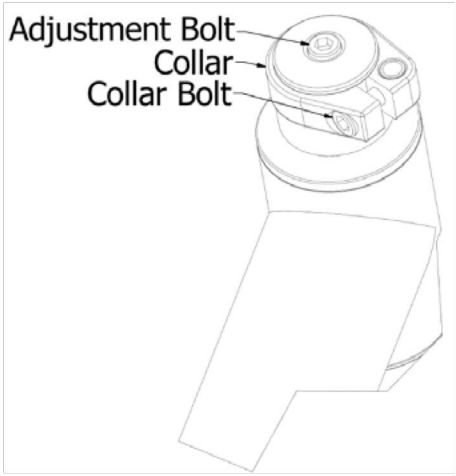

Figure 18 - Headset adjustment
(Collar will vary by steering system.)

When tightening the threadless headsets, first, you have to loosen the collar. Second, tighten the screw on the top of the headset until the play is resolved but not so tight as to bind the headset. Retighten the collar, and you're done!

6.6.2 Steering

Uneven or excessive wear on the front tires points to out of spec toe-in. This could be caused by one of front wheels hitting an obstacle. Before adjusting the toe, check to make sure the track rods are not bent and that the ball joints are in good condition. Use a long ruler or rod to measure the distance between the inside of the rims at the front of the wheel, and then at the rear, both measured at the same axle height. The distance should be the same, or up to 2mm less at the front (toed-in). If the toe is out of adjustment, loosen the two lock nuts on one steering rod, and rotate the rod (a small rotation gives a fairly large change in track). Tighten the lock nuts when the toe is correct.

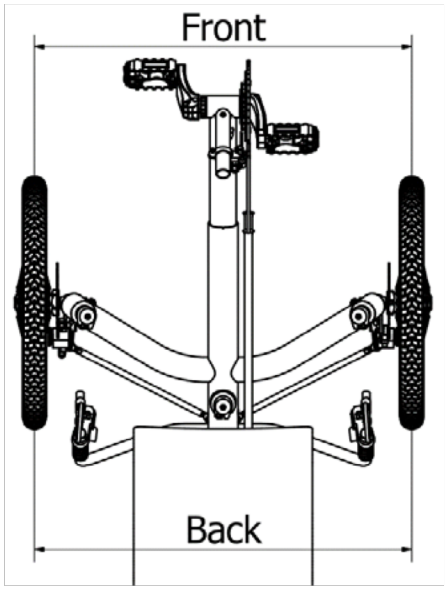

Figure 19 - Measuring toe-in

6.6.3 Suspension (TRIcon Only)

AZUB TRIcon frame has a suspended rear wheel. The rear swingarm pivots on sealed bearings and uses a 165 mm air or spring rear shock. A QR on the shock allows easy swingarm folding.

The rear suspension pivot is equipped with sealed bearings which require no maintenance. We recommend checking the tightness of the pivot bolt every month. The bearings need changed about every 10000 km. Please contact Azub for replacement specifications.

Keep your shock clean for maximum longevity. Most rear shocks require special skills to repair or service. Consult their service manuals for proper maintenance. We recommend that you have the suspension checked every year.

7. Additional Resources

There are recumbent communities and resources such as www.bentrideronline.com and www.recumbents.com which host free forums for recumbent riders. These provide a great way to connect with the recumbent community.

8. Warranty

The Azub Bike standard warranty for the original owner of our product is 2 years for frame, steering and seat components. If the customer completes and submits the included registration form to Azub Bike, this warranty is extended to 5 years. This warranty covers that the frame, steering and seat are free of defective materials and workmanship. This warranty is valid only with the original paint and without any modifications.

The warranty for components follows the laws of the country/state where you purchased the bike.

The warranty is not valid in the case of damage through normal wear and tear, or irregular use of the bike or components (includes damage from crashes, jumping and other activities for which AZUB trikes were not designed), inadequate care and maintenance, overloading through excess weight, incorrect assembly, modifications to the trike, or failure to follow instructions in this user guide. Warranty is offered to the original owner only, and is not transferable.

Some type of trike damage can point to abuse. Azub Bike reserves the right not to recognize a warranty if the failure or damage wasn`t caused by material or manufacturing defect, and the decision to honor the warranty is at the sole discretion of Azub Bike. The owner shall be responsible for all shipping costs connected with the repair or replacement of warranted parts. In the case of recognition of warranty, Azub Bike will normally consider compensation for reasonable shipping costs associated with warranty claims. If you have a warranty claim, contact your dealer or us! We are proud of our products and our good name, and we will do our best to help you to solve your problems with our products.

Liability waiver: Taking part in any activity can result in injury or death. The rider is assuming the risk for any injury and property damage that may result from using our product. Azub Bike shall in no event be liable for incidental or consequential losses, damages or expenses in connection with its products.

You are also responsible for meeting all legal requirements of country, state, and locality where you are riding your trike. The important areas you need to consider are lights, reflectors, and helmet use. You can ask your local bike dealer for information about legal requirements in your area.


We wish you many nice moments
on your new recumbent.

Follow our way

/azubrecumbents /azubrecumbents @azubrecumbents /azubrecumbents @azubrecumbents